Biyani Girls College
I Internal Examination Sept. 2019
Class: - BCA I
Subject: - Computer Organization (BCA 105)

MM: 40 Set: A Time:1½ Hrs

[I] Very Short Answer Questions (Max 40 words). (5*2=10)

Q1. What do you mean by Central Processing Unit?

Ans. The central processing unit (CPU) is the unit which performs most of the processing inside a computer. To control instructions and data flow to and from other parts of the computer, the CPU relies heavily on a chipset, which is a group of microchips located on the motherboard.

The CPU has two components:

- Control Unit: extracts instructions from memory and decodes and executes them
- Arithmetic Logic Unit (ALU): handles arithmetic and logical operations

To function properly, the CPU relies on the system clock, memory, secondary storage, and data and address buses.

This term is also known as a central processor, microprocessor or chip.

Q2. Define Processing?

Ans. When a computer receives data from an input device (e.g., keyboard or mouse) the data must go through an intermediate stage before it can be sent to an output device (e.g., monitor or printer). A processing device is any device in a computer that handles this intermediate stage. For example, in the diagram below, the CPU is the processing device.

Q3. What is IC?

Ans. An integrated circuit (**IC**), sometimes called a chip or microchip, is a semiconductor wafer on which thousands or millions of tiny resistors, capacitors, and transistors are fabricated. An **IC** can function as an amplifier, oscillator, timer, counter, **computer** memory, or microprocessor.

Q4. Define Port?

Ans. When referring to a physical device, a hardware port or peripheral port is a hole or connection found on the front or back of a computer. Ports allow computers to access external devices such as printers.

Computer ports have numerous functions and connectors of varying designs. Types of computer ports include:

- Serial Ports: These are most commonly used for connections to mice and modems.
- Parallel Ports: These are most commonly used for printers.
- Small Computer System Interface (SCSI) Ports: These are used to connect printers and up to seven total devices, such as hard disks and tape drives, to the same port; they can support higher data transmission speeds than serial or parallel ports.
- Universal Serial Bus (USB) Ports: As the name implies, these can be used to connect many devices including all previously mentioned plus keyboards, scanners, external hard drives, USB drives (also sometimes called thumb drives or portable USB drives), cameras, iphones and many other peripherals and devices.

Q5. What is Printer?

Ans. A printer is a device that accepts text and graphic output from a computer and transfers the information to paper, usually to standard size sheets of paper. Printers vary in size, speed, sophistication, and cost. In general, more expensive printers are used for higher-resolution color printing.

Personal computer printers can be distinguished as impact or non-impact printers. Early impact printers worked something like an automatic typewriter, with a key striking an inked impression on

paper for each printed character. The dot-matrix printer was a popular low-cost personal computer printer. It's an impact printer that strikes the paper a line at a time. The best-known non-impact printers are the inkjet printer, of which several makes of low-cost color printers are an example, and the laser printer. The inkjet sprays ink from an ink cartridge at very close range to the paper as it rolls by. The laser printer uses a laser beam reflected from a mirror to attract ink (called toner) to selected paper areas as a sheet rolls over a drum.

[II] Short Answer Questions (Max 80 words). (2*5=10)

Q1. Define Number System.

Ans. **Number systems** are the technique to represent numbers in the computer system architecture, every value that you are saving or getting into/from computer memory has a defined number system. Computer architecture supports following number systems.

- **Binary number system**
- **Octal number system**
- **Decimal number system**
- **Hexadecimal (hex) number system**

1) Binary Number System

A Binary number system has only two digits that are **0 and 1**. Every number (value) represents with 0 and 1 in this number system. The base of binary number system is 2, because it has only two digits.

2) Octal number system

Octal number system has only eight (8) digits from **0 to 7**. Every number (value) represents with 0,1,2,3,4,5,6 and 7 in this number system. The base of octal number system is 8, because it has only 8 digits.

3) Decimal number system

Decimal number system has only ten (10) digits from **0 to 9**. Every number (value) represents with 0,1,2,3,4,5,6, 7,8 and 9 in this number system. The base of decimal number system is 10, because it has only 10 digits.

4) Hexadecimal number system

A Hexadecimal number system has sixteen (16) alphanumeric values from **0 to 9** and **A to F**. Every number (value) represents with 0,1,2,3,4,5,6, 7,8,9,A,B,C,D,E and F in this number system. The base of hexadecimal number system is 16, because it has 16 alphanumeric values. Here **A is 10**, **B is 11**, **C is 12**, **D is 13**, **E is 14** and **F is 15**.

Q2. What is system bus? Explain it.

The system bus is a pathway composed of cables and connectors used to carry data between a computer microprocessor and the main memory. The bus provides a communication path for the data and control signals moving between the major components of the computer system. The system bus works by combining the functions of the three main buses: namely, the data, address and control buses. Each of the three buses has its separate characteristics and responsibilities.

The system bus combines the functions of the three main buses, which are as follows:

- The control bus carries the control, timing and coordination signals to manage the various functions across the system.

- The address bus is used to specify memory locations for the data being transferred.

- The data bus, which is a bidirectional path, carries the actual data between the processor, the memory and the peripherals.

[III] Long Answer Questions (Max 150 words). (2*10=20)

Q1. Define Von Neumann Architecture machine.

Ans. Historically there has been 2 types of Computers:

1. **Fixed Program Computers –** Their function is very specific and they couldn't be programmed, e.g. Calculators.
2. **Stored Program Computers –** These can be programmed to carry out many different tasks, applications are stored on them, hence the name.
   The modern computers are based on a stored-program concept introduced by John Von Neumann. In this stored-program concept, programs and data are stored in a separate storage unit called memories and are treated the same. This novel idea meant that a computer built with this architecture would be much easier to reprogram.
   The basic structure is like,

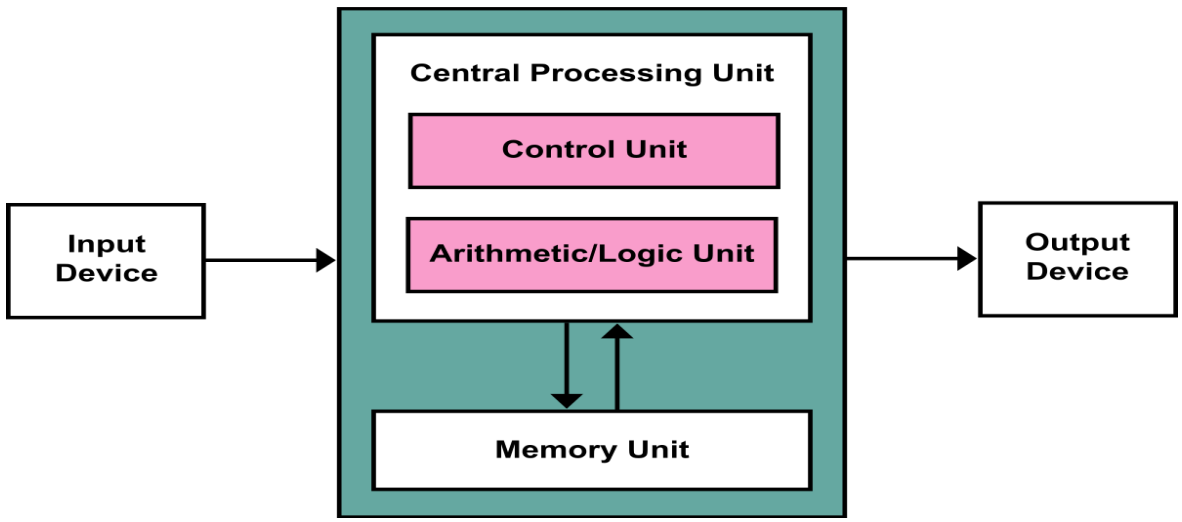

It is also known as **IAS** computer and is having three basic units:

1. The Central Processing Unit (CPU)
2. The Main Memory Unit
3. The Input/output Device

Let's consider them in details.

- **Control Unit –**
  A control unit (CU) handles all processor control signals. It directs all input and output flow, fetches code for instructions and controlling how data moves around the system.
- **Arithmetic and Logic Unit (ALU) –**
  The arithmetic logic unit is that part of the CPU that handles all the calculations the CPU may need, e.g. Addition, Subtraction, Comparisons. It performs Logical Operations, Bit Shifting Operations, and Arithmetic Operation.
- **Main Memory Unit (Registers) –**

1. **Accumulator:** Stores the results of calculations made by ALU.
2. **Program Counter (PC):** Keeps track of the memory location of the next instructions to be dealt with. The PC then passes this next address to Memory Address Register (MAR).
3. **Memory Address Register (MAR):** It stores the memory locations of instructions that need to be fetched from memory or stored into memory.
4. **Memory Data Register (MDR):** It stores instructions fetched from memory or any data that is to be transferred to, and stored in, memory.
5. **Current Instruction Register (CIR):** It stores the most recently fetched instructions while it is waiting to be coded and executed.
6. **Instruction Buffer Register (IBR):** The instruction that is not to be executed immediately is placed in the instruction buffer register IBR.

- **Input/output Devices –** Program or data is read into main memory from the *input device* or secondary storage under the control of CPU input instruction. *Output devices* are used to output the

information from a computer. If some results are evaluated by computer and it is stored in the computer, then with the help of output devices, we can present it to the user.

- **Buses –** Data is transmitted from one part of a computer to another, connecting all major internal components to the CPU and memory, by the means of Buses. Types:

1. **Data Bus:** It carries data among the memory unit, the I/O devices, and the processor.
2. **Address Bus:** It carries the address of data (not the actual data) between memory and processor.
3. **Control Bus:** It carries control commands from the CPU (and status signals from other devices) in order to control and coordinate all the activities within the computer.

Von Neumann bottleneck –

Whatever we do to enhance performance, we cannot get away from the fact that instructions can only be done one at a time and can only be carried out sequentially. Both of these factors hold back the competence of the CPU. This is commonly referred to as the 'Von Neumann bottleneck'. We can provide a Von Neumann processor with more cache, more RAM, or faster components but if original gains are to be made in CPU performance then an influential inspection needs to take place of CPU configuration.

This architecture is very important and is used in our PCs and even in Super Computers.

Q2. What is memory? Explain types of memory.

- Computer memory is a generic term for all of the different types of data storage technology that a computer may use, including RAM, ROM, and flash memory.
- Some types of computer memory are designed to be very fast, meaning that the central processing unit (CPU) can access data stored there very quickly. Other types are designed to be very low cost, so that large amounts of data can be stored there economically.
- Another way that computer memory can vary is that some types are *non-volatile*, which means they can store data on a long term basis even when there is no power. And some types are *volatile*, which are often faster, but which lose all the data stored on them as soon as the power is switched off.
- A computer system is built using a combination of these types of computer memory, and the exact configuration can be optimized to produce the maximum data processing speed or the minimum cost, or some compromise between the two.

The key difference between primary and secondary memory is speed of access.

- **Primary memory** includes ROM and RAM, and is located close to the CPU on the computer motherboard, enabling the CPU to read data from primary memory very quickly indeed. It is used to store data that the CPU needs imminently so that it does not have to wait for it to be delivered.
- **Secondary memory** by contrast, is usually physically located within a separate storage device, such as a hard disk drive or solid state drive (SSD), which is connected to the computer system either directly or over a network. The cost per gigabyte of secondary memory is much lower, but the read and write speeds are significantly slower.

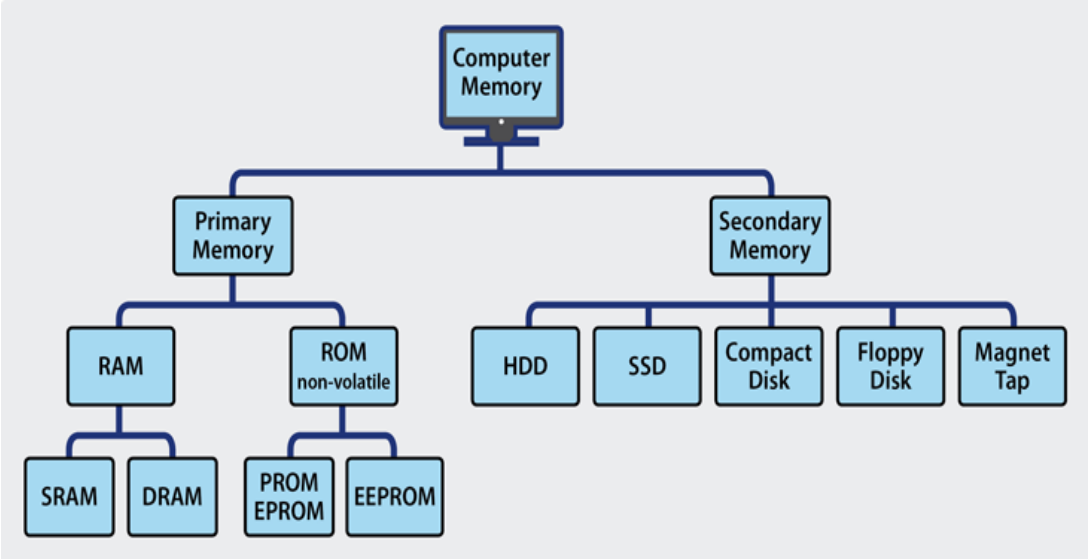

Over several periods of computer evolution, a wide of array of computer memory types has been deployed, each with its own strengths and weaknesses.

Primary Memory Types: RAM and ROM

There are two key types of primary memory:

1. RAM, or random access memory
2. ROM, or read-only memory

Let's look in-depth at both types of memory.

1) RAM Computer Memory

The acronym RAM stems from the fact that data stored in random access memory can be accessed – as the name suggests – in any random order. Or, put another way, any random bit of data can be accessed just as quickly as any other bit.

The most important things to understand about RAM are that RAM memory is very fast, it can be written to as well as read, it is volatile (so all data stored in RAM memory is lost when it loses power) and, finally, it is very expensive compared to all types of secondary memory in terms of cost per gigabyte. It is because of the relative high cost of RAM compared to secondary memory types that most computer systems use both primary and secondary memory.

Data that is required for imminent processing is moved to RAM where it can be accessed and modified very quickly, so that the CPU is not kept waiting. When the data is no longer required it is shunted out to slower but cheaper secondary memory, and the RAM space that has been freed up is filled with the next chunk of data that is about to be used.

Types of RAM

- **DRAM**: DRAM stands for Dynamic RAM, and it is the most common type of RAM used in computers. The oldest type is known as single data rate (SDR) DRAM, but newer computers use faster dual data rate (DDR) DRAM. DDR comes in several versions including DDR2 , DDR3, and DDR4, which offer better performance and are more energy efficient than DDR. However different versions are incompatible, so it is not possible to mix DDR2 with DDR3 DRAM in a computer system. DRAM consists of a transistor and a capacitor in each cell.
- **SRAM**: SRAM stands for Static RAM, and it is a particular type of RAM which is faster than DRAM, but more expensive and bulker, having six transistors in each cell. For those reasons SRAM is generally only used as a data cache within a CPU itself or as RAM in very high-end server systems. A small SRAM cache of the most imminently-needed data can result in significant speed improvements in a system

The key differences between DRAM and SRAM is that SRAM is faster than DRAM - perhaps two to three times faster - but more expensive and bulkier. SRAM is usually available in megabytes, while DRAM is purchased in gigabytes.
DRAM uses more energy than SRAM because it constantly needs to be refreshed to maintain data integrity, while SRAM - though volatile – does not need constant refreshing when it is powered up.

2) ROM Computer Memory

ROM stands for read-only memory, and the name stems from the fact that while data can be read from this type of computer memory, data cannot normally be written to it. It is a very fast type of computer memory which is usually installed close to the CPU on the motherboard.
ROM is a type of non-volatile memory, which means that the data stored in ROM persists in the memory even when it receives no power – for example when the computer is turned off. In that sense it is similar to secondary memory, which is used for long term storage.
When a computer is turned on, the CPU can begin reading information stored in ROM without the need for drivers or other complex software to help it communicate. The ROM usually contains "bootstrap code" which is the basic set of instructions a computer needs to carry out to become aware of the operating system stored in secondary memory, and to load parts of the operating system into primary memory so that it can start up and become ready to use.
ROM is also used in simpler electronic devices to store firmware which runs as soon as the device is switched on.

Types of ROM

ROM is available in several different types, including PROM, EPROM, and EEPROM.

- **PROM** PROM stands for Programmable Read-Only Memory, and it is different from true ROM in that while a ROM is programmed (i.e. has data written to it) during the manufacturing process, a PROM is manufactured in an empty state and then programmed later using a PROM programmer or burner.
- **EPROM** EPROM stands for Erasable Programmable Read-Only Memory, and as the name suggests, data stored in an EPROM can be erased and the EPROM reprogrammed. Erasing an EPROM involves removing it from the computer and exposing it to ultraviolet light before re-burning it.
- **EEPROM** EEPROM stands for Electrically Erasable Programmable Read-Only Memory, and the distinction between EPROM and EEPROM is that the latter can be erased and written to by the computer system it is installed in. In that sense EEPROM is not strictly read-only. However in many cases the write process is slow, so it is normally only done to update program code such as firmware or BIOS code on an occasional basis

Confusingly, NAND flash memory (such as that found in USB memory sticks and solid state disk drives) is a type of EEPROM, but NAND flash is considered to be secondary memory.

Secondary Memory Types

Secondary memory comprises many different storage media which can be directly attached to a computer system. These include:

- hard disk drives
- solid state drives (SSDs)
- Optical (CD or DVD) drives
- Tape drives

Secondary memory also includes:

- Storage arrays including 3D NAND flash arrays connected over a storage area network (SAN)
- Storage devices which may be connected over a conventional network (known as network attached storage, or NAS)

Arguably cloud storage can also be called secondary memory.

Differences between RAM and ROM

ROM:

- Non-volatile
- Fast to read
- Usually used in small quantities
- Cannot be written to quickly
- Used to store boot instructions or firmware
- Relatively expensive per megabyte stored compared to RAM

RAM:

- Volatile
- Fast to read and write
- Used as system memory to store data (including program code) that the CPU needs to process imminently
- Relatively cheap per megabyte stored compared to ROM, but relatively expensive compared to secondary memory

Biyani Girls College
I Internal Examination Sept. 2019
Class: - BCA III
Subject: - Computer Organization (BCA 105)

MM: 40 Set: B Time: 1 ½ Hrs

[I] Very Short Answer Questions (Max 40 words). (5*2=10)

Q1. What are the characteristics of computer?

There are a number of **basic characteristics** that **computers** of all shapes and sizes have in common. **Five** of these are: Speed, storage capacity, productivity, reliability and efficiency. Without these **characteristics**, a **computer** would not be the system that we know it as.

Q2.What is Primary Memory?

- Primary memory is computer memory that is accessed directly by the CPU. This includes several types of memory, such as the processor cache and system ROM. However, in most cases, primary memory refers to system RAM.
- RAM, or random access memory, consists of one or more memory modules that temporarily store data while a computer is running. RAM is volatile memory, meaning it is erased when the power is turned off. Therefore, each time you start up your computer, the operating system must be loaded from secondary memory (such as a hard drive) into the primary memory, or RAM. Similarly, whenever you launch an application on your computer, it is loaded into RAM.
- The operating system and applications are loaded into primary memory, since RAM can be accessed much faster than storage devices. In fact, the data can be transferred between CPU and RAM more than a hundred times faster than between the CPU and the hard drive. By loading data into RAM, programs can run significantly faster and are much more responsive than if than constantly accessed data from secondary memory.

Q3. Define Computer?

A **computer** is a machine or device that performs processes, calculations and operations based on instructions provided by a software or hardware program. It is designed to execute applications and provides a variety of solutions by combining integrated hardware and software components.

Q4. What do you mean by Mother Board?

The **motherboard** is the **main** circuit **board** of your computer and is also known as the mainboard or **logic board**. ... Attached to the **motherboard**, you'll find the CPU, ROM, memory RAM

expansion slots, PCI slots, and USB ports. It also includes controllers for devices like the hard drive, DVD drive, keyboard, and mouse.

Q5. What do mean by PC?

In its more general usage, a **personal computer** (**PC**) **is** a microcomputer designed for use by one person at a time. Prior to the **PC**, **computers** were designed for (and only affordable by) companies who attached terminals for multiple users to a single large **computer** whose resources were shared among all users.

[II] Short Answer Questions (Max 80 words). (2*5=10)

Q1. Define Bus architecture in details?

- Bus is a subsystem that is used to transfer data and other information between devices.Means various devices in computer like(Memory, CPU, I/O and Other) are communicate with each other through buses.In general, a bus is said to be as the communication pathway connecting two or more devices.
- A key characteristics of a bus is that it is a shared transmission medium,as multiple devices are attached to a bus.
- Typically, a bus consists of multiple communication Pathways or lines which are either in the form of wires or metal lines etched in a card or board(Printed Circuit Board).Each line is capable of transmitting binary 1 and binary 0.

- Computer System Contains a number of different buses that provide pathways between components at various levels of computer system hierarchy.
  But before discussing them i.e., types of buses , i will first describe here one of the most important aspect of buses which is described below-
- Any Bus consists, typically of form about 50 to 100 of separate lines. And on any bus, the lines may generally be classified into three functional groups, as depicted in figure below:

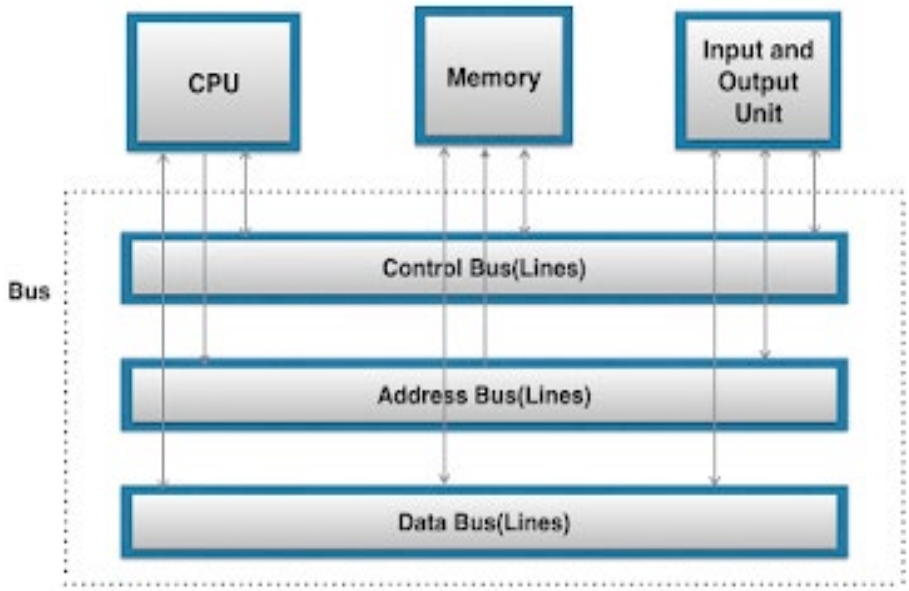

Types of bus:

- Data bus

Data bus carries data from on component to another. It is uni-directional for input and output devices and bi-directional for memory and CPU.

- Control bus
  Control bus carries control signal. CU of CPU uses control signal for controlling all the components. It is uni-directional from CPU to all other components.
- Address bus
  Address bus carries memory address. A memory address is a numerical value used for identifying a memory location. Computer performs its entire task through the memory address. CU of CPU sends memory address to all the components. So, address bus is also uni-directional from CPU to all other components.

Q2. Define Number System.
Ans. **Number systems** are the technique to represent numbers in the computer system architecture, every value that you are saving or getting into/from computer memory has a defined number system. Computer architecture supports following number systems.

- **Binary number system**
- **Octal number system**
- **Decimal number system**
- **Hexadecimal (hex) number system**

1) Binary Number System
A Binary number system has only two digits that are **0 and 1**. Every number (value) represents with 0 and 1 in this number system. The base of binary number system is 2, because it has only two digits.
2) Octal number system
Octal number system has only eight (8) digits from **0 to 7**. Every number (value) represents with 0,1,2,3,4,5,6 and 7 in this number system. The base of octal number system is 8, because it has only 8 digits.
3) Decimal number system
Decimal number system has only ten (10) digits from **0 to 9**. Every number (value) represents with 0,1,2,3,4,5,6, 7,8 and 9 in this number system. The base of decimal number system is 10, because it has only 10 digits.
4) Hexadecimal number system
A Hexadecimal number system has sixteen (16) alphanumeric values from **0 to 9** and **A to F**. Every number (value) represents with 0,1,2,3,4,5,6, 7,8,9,A,B,C,D,E and F in this number system. The base of hexadecimal number system is 16, because it has 16 alphanumeric values. Here **A is 10**, **B is 11**, **C is 12**, **D is 13**, **E is 14** and **F is 15**.

[III] Long Answer Questions (Max 150 words). **(2*10=20)**
Q1. Explain generations of computers.

a. 1940 – 1956: First Generation – Vacuum Tubes

- These early computers used vacuum tubes as circuitry and magnetic drums for memory. As a result they were enormous, literally taking up entire rooms and costing a fortune to run. These were inefficient materials which generated a lot of heat, sucked huge electricity and subsequently generated a lot of heat which caused ongoing breakdowns.
- These first generation computers relied on 'machine language' (which is the most basic programming language that can be understood by computers). These computers were limited to solving one problem at a time. Input was based on punched cards and paper tape. Output came out on print-outs. The two notable machines of this era were the UNIVAC and ENIAC machines – the UNIVAC is the first every commercial computer which was purchased in 1951 by a business – the US Census Bureau.

b. 1956 – 1963: Second Generation – Transistors

- The replacement of vacuum tubes by transistors saw the advent of the second generation of computing. Although first invented in 1947, transistors weren't used significantly in computers until the end of the 1950s. They were a big improvement over the vacuum tube, despite still subjecting computers to damaging levels of heat. However they were hugely superior to the vacuum tubes,

making computers smaller, faster, cheaper and less heavy on electricity use. They still relied on punched card for input/printouts.

- The language evolved from cryptic binary language to symbolic ('assembly') languages. This meant programmers could create instructions in words. About the same time high level programming languages were being developed (early versions of COBOL and FORTRAN). Transistor-driven machines were the first computers to store instructions into their memories – moving from magnetic drum to magnetic core 'technology'. The early versions of these machines were developed for the atomic energy industry.

c. 1964 – 1971: Third Generation – Integrated Circuits

- By this phase, transistors were now being miniaturised and put on silicon chips (called semiconductors). This led to a massive increase in speed and efficiency of these machines. These were the first computers where users interacted using keyboards and monitors which interfaced with an operating system, a significant leap up from the punch cards and printouts. This enabled these machines to run several applications at once using a central program which functioned to monitor memory.
- As a result of these advances which again made machines cheaper and smaller, a new mass market of users emerged during the '60s.

d. 1972 – 2010: Fourth Generation – Microprocessors

- This revolution can be summed in one word: Intel. The chip-maker developed the Intel 4004 chip in 1971, which positioned all computer components (CPU, memory, input/output controls) onto a single chip. What filled a room in the 1940s now fit in the palm of the hand. The Intel chip housed thousands of integrated circuits. The year 1981 saw the first ever computer (IBM) specifically designed for home use and 1984 saw the MacIntosh introduced by Apple. Microprocessors even moved beyond the realm of computers and into an increasing number of everyday products.
- The increased power of these small computers meant they could be linked, creating networks. Which ultimately led to the development, birth and rapid evolution of the Internet. Other major advances during this period have been the Graphical user interface (GUI), the mouse and more recently the astounding advances in lap-top capability and hand-held devices.

e. 2010- : Fifth Generation – Artificial Intelligence

- Computer devices with artificial intelligence are still in development, but some of these technologies are beginning to emerge and be used such as voice recognition.
- AI is a reality made possible by using parallel processing and superconductors. Leaning to the future, computers will be radically transformed again by quantum computation, molecular and nano technology.
- The essence of fifth generation will be using these technologies to ultimately create machines which can process and respond to natural language, and have capability to learn and organise themselves.

Q2. Define inputs and output devices used in computer system.

Ans. The devices which are used to input the data and the programs in the computer are known as "**Input Devices**". or Input device can read data and convert them to a form that a computer can use. **Output Device** can produce the final product of machine processing into a form usable by humans. It provides man to machine communication. Some of the I/O devices are explained below:

(1) **Keyboard** : Keyboard is used in the input phase of a computer-based information system. Keyboard is most common input device is used today. The data and instructions are input by typing on the keyboard. The message typed on the keyboard reaches the memory unit of a computer. It's

connected to a computer via a cable. Apart from alphabet and numeral keys, it has other function keys for performing different functions.
(2) **Mouse** : It's a pointing device. The mouse is rolled over the mouse pad, which in turn controls the movement of the cursor in the screen. We can click, double click or drag the mouse. Most of the mouse's have a ball beneath them, which rotates when the mouse in moved. The ball has 2 wheels of the sides, which in turn mousse with the movement of the ball. The sensor notifies the speed of its movements to the computer, which in turn moves the cursor/pointer on the screen.
(3) **Scanner** : Scanners are used to enter information directly in to the computers memory. This device works like a Xerox machine. The scanner converts any type of printed or written information including photographs into digital pulses, which can be manipulated by the computer.
(4) **Track Ball** : Track ball is similar to the upside- down design of the mouse. The user moves the ball directly, while the device itself remains stationary. The user spins the ball in various directions to effect the screen movements.
(5) **Light Pen** : This is an input device which is used to draw lines or figures on a computer screen. It's touched to the CRT screen where it can detect raster on the screen as it passes.
(6) **Optical Character Rader** : It's a device which detects alpha numeric characters printed or written on a paper. The text which is to be scanned is illuminated by a low frequency light source. The light is absorbed by the dark areas but reflected from the bright areas. The reflected light is received by the photocells.
(7) **Bar Code Reader** : This device reads bar codes and coverts them into electric pulses to be processed by a computer. A bar code is nothing but data coded in form of light and dark bars.
(8) **Voice Input Systems** : This devices converts spoken words to M/C language form. A micro phone is used to convert human speech into electric signals. The signal pattern is then transmitted to a computer when it's compared to a dictionary of patterns that have been previously placed in a storage unit of computer. When a close match is found, the word is recognized.
(9) **Plotter** : Plotter is an O/P device that is used to produce graphical O/P on papers. It uses single color or multi color pens to draw pictures as blue print etc.
(10) **Digital Camera** : It converts graphics directly into digital form. It looks like an ordinary camera, but no film is used therein, instead a CCD (changed coupled Divide) Electronic chip in used. When light falls, on the chip though the lens, it converts light waves into electrical waves.

Output Device

Monitor

The most common output device used with computers is the monitor, which displays video images and text. A monitor essentially consists of a screen, circuitry, a power supply, buttons to adjust screen settings, and a casing that contains all of these components. The first monitors used the same technology as early televisions, relying on a cathode ray tube and fluorescent screen, but nowadays they incorporate flat panel display technology. VDT(video display terminal) and VDU(video display unit) are alternative names for monitors.

2. Printer

Printers are another common output device found in homes in offices. In computing terms, they take electronic data stored on a computer and generates a hard copy of it. Usually that means printing images and text onto paper. There are numerous different types of printer, with Inkjet and laser printers being two of the most common. Modern printers usually connect to a computer with a USB cable or via Wi-Fi.

3. Computer Speakers

Computer speakers are hardware devices that transform the signal from the computer's sound card into audio. Speakers are essential if you want a louder sound, surround sound, fuller bass, or just a better quality of audio. External computer speakers began to appear in stores in the early 1990's when computer gaming, digital music, and other forms of media became popular. Some computer speakers are wireless nowadays, connecting to the computer via Bluetooth.

4. Headphones

Also known as earphones, headphones allow you to listen to audio without disrupting other people in the vicinity. They connect via the computer line out, or to the speakers. The first headphones were invented in 1910 for U.S. Navy use. Nowadays, headphones come in all sorts of shapes and sizes,

from basic earbuds to the more traditional style with padding around the earpieces and a connecting band that fits over the user's head.

5. Projector

As its name suggests, this output device "projects" computer images onto a wall or screen. Projectors are typically used for presentations, watching movies, or as a teaching aid, as they enable an entire roomful of people to see images generated by a single computer. Modern projectors usually connect to the computer via an HDMI cable or VGA.

6. GPS

GPS (Global Positioning System) uses a network of satellites to provide information, which can then be used to calculate the location of a specific device. It is often used with other digital technology, such as mapping apps. GPS can produce very accurate results, it was originally developed for the U.S. military, but following the downing of a civilian airlines flight by Soviet jets in 1983, the system was made available for commercial use.

7. Sound Card

The sound card controls the output of sound signals, enabling devices like speakers and headphones to work. The sound card is known as an expansion card, which means it can be added to the motherboard. Although a sound card is not essential to a computer's basic functionality, you need one if you wish to play games, watch movies, listen to music, and use audio and video conferencing.

8. Video Card

As with the sound card, the video card is an expansion card that slots into the motherboard. The video card processes images and video, enabling visuals to be seen on a display. Most computers have basic video and graphics capabilities built into the computer's motherboard, but for faster, more detailed graphics, a video card is required.

9. Braille Reader

A braille reader is a peripheral device that enables a blind person to read text displayed on a computer monitor. The text is sent by the computer to the device, where it translated into a braille format and made readable by pushing rounded pins up through a flat surface. Braille readers are also called braille displays and come in various sizes.

10. Plotter

A plotter is a similar type of hardware device to a printer. Unlike a printer, however, plotters use writing tools, such as pen, pencil, marker, to draw lines. Designed to use vector graphics, plotters were once commonly employed for computer-aided design, but have now been largely replaced by wide-format printers.